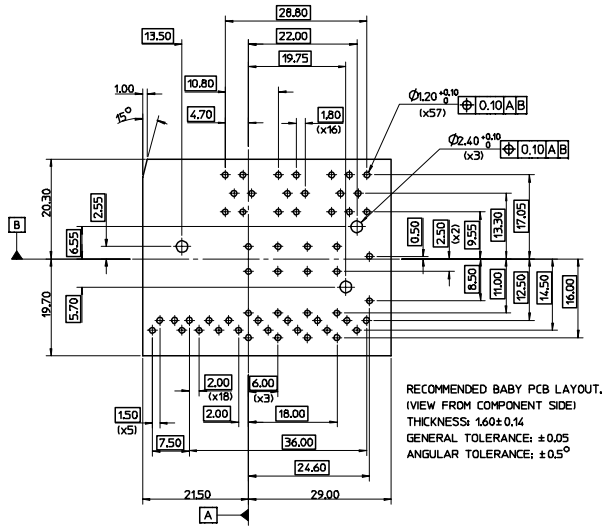

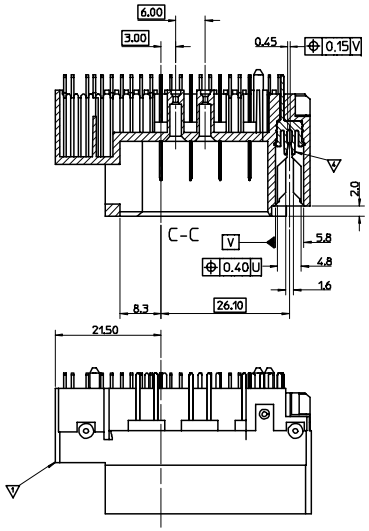

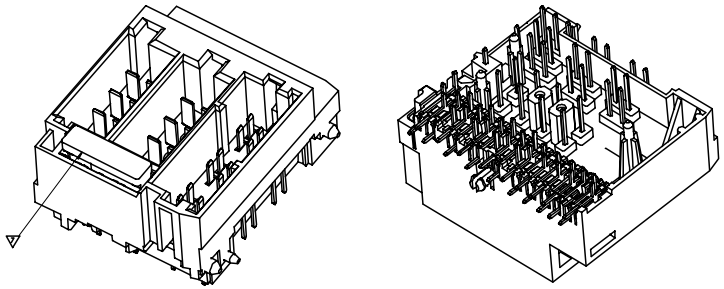

REF NO.	COMPONENT	PART NUMBER		MADE FROM	REMARKS
		91009-0021	91009-0022		
		Qty	Qty		
▽	HOUSING	1	1	ULTRAMID B3WG6(30%)	COLOUR: BLACK
▽	LEVEL A&B CONTACT	16	16	0.5 THICK BRASS, CuZn37	3-5um Sn OVER 1.27um MIN. Ni UNDERCOAT OVERALL
▽	LEVEL C CONTACT	20	20		
▽	FUSE CONTACT	2	2	0.7 THICK PHOSPHOR BRONZE CuSn8	
▽	UPPER BD-BD CONTACT	10	10	0.5 THICK BRASS, CuZn37	
▽	LOWER BD-BD CONTACT	9	9		
▽	FUSE	1	0	FORM C	DIN 72 581 -C10

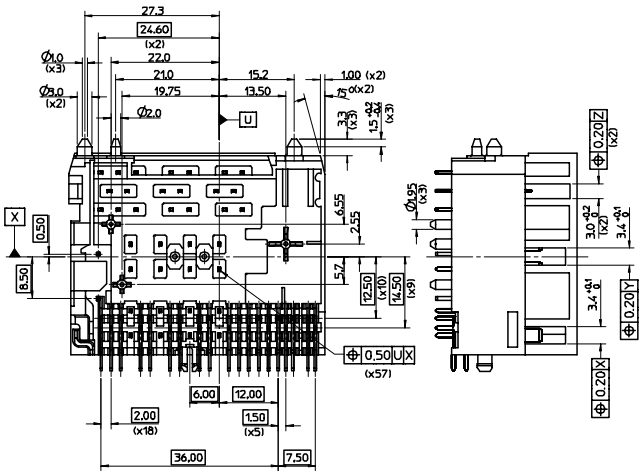

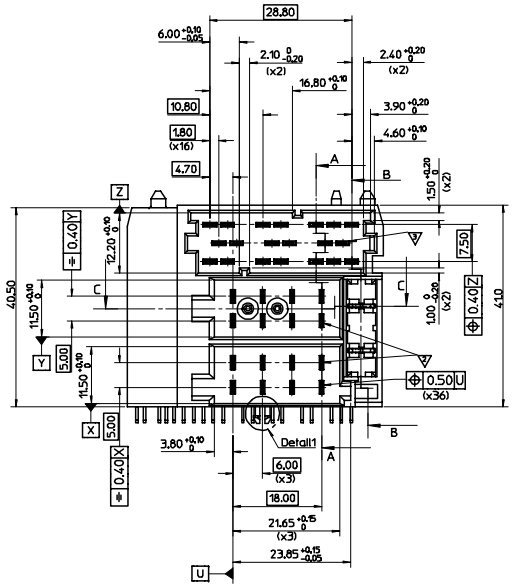

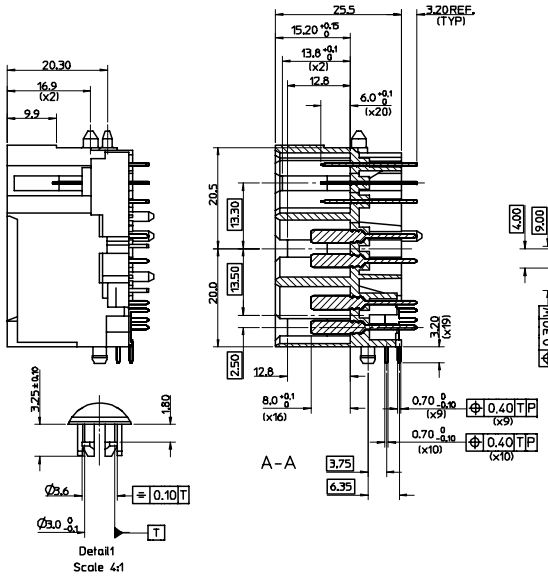

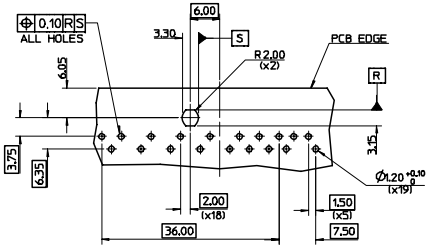

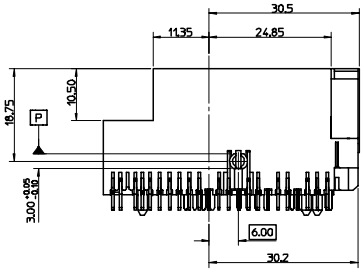

REV	DESCRIPTION
T	Added Part # -0022 EC NO: E2005-0477 DRWN: SGMCMAH 2007/04/03 CHKD: 2007/04/11 APPR: BMAGUIRE 2007/04/25

QUALITY SYMBOLS: ▼ - 0 ; ▽ - 0

GENERAL TOLERANCES (UNLESS SPECIFIED)	mm	INCH
4 PLACES	± ---	± ---
3 PLACES	± ---	± ---
2 PLACES	± 0.2	± ---
1 PLACE	± 0.2	± ---
ANGULAR ± 2 °		

DRAFT WHERE APPLICABLE MUST REMAIN D WITHIN DIMENSIONS

SCALE	2:1
DESIGN UNITS	METRIC
DIMENSION STYLE	MM ONLY
DRAWN BY	EKELLY
DATE	99.07.20
CHECKED BY	CTOBIN
DATE	99.07.20
APPROVED BY	MWILHITE
DATE	99.07.20

THIRD ANGLE PROJECTION

REVISE ON CAD ONLY

TITLE: JUNCTION BOX VERSION 3

MOLEX INCORPORATED

MATERIAL NO.: See Table

DOCUMENT NO.: SD-91009-003

SHEET NO.: 1 OF 1

THIS DRAWING CONTAINS INFORMATION THAT IS PROPRIETARY TO MOLEX INCORPORATED AND SHOULD NOT BE USED WITHOUT WRITTEN PERMISSION

A1

tb_frame_A1_P_AM_T
rev. B1 2000/08/01